Tolerance	
<3.00	±0.01
>3.00	±0.02

UNIT = METER

UNCONTROLLED DOCUMENT

STAR TANK

MODEL SS-763AZ For Factory

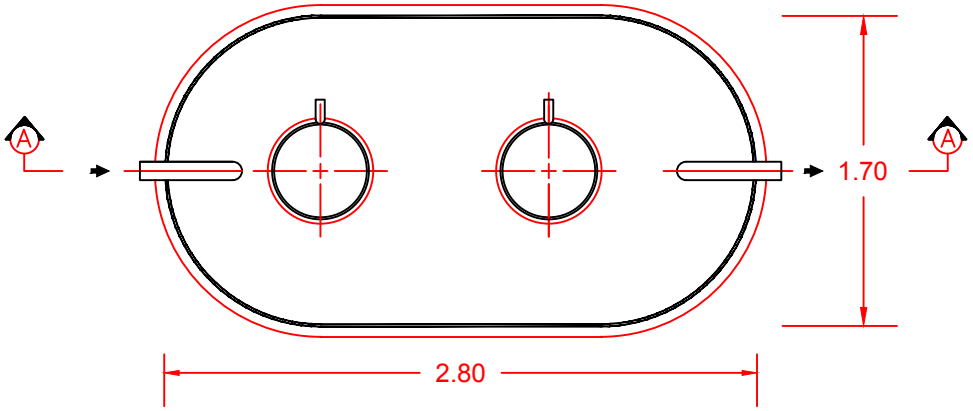

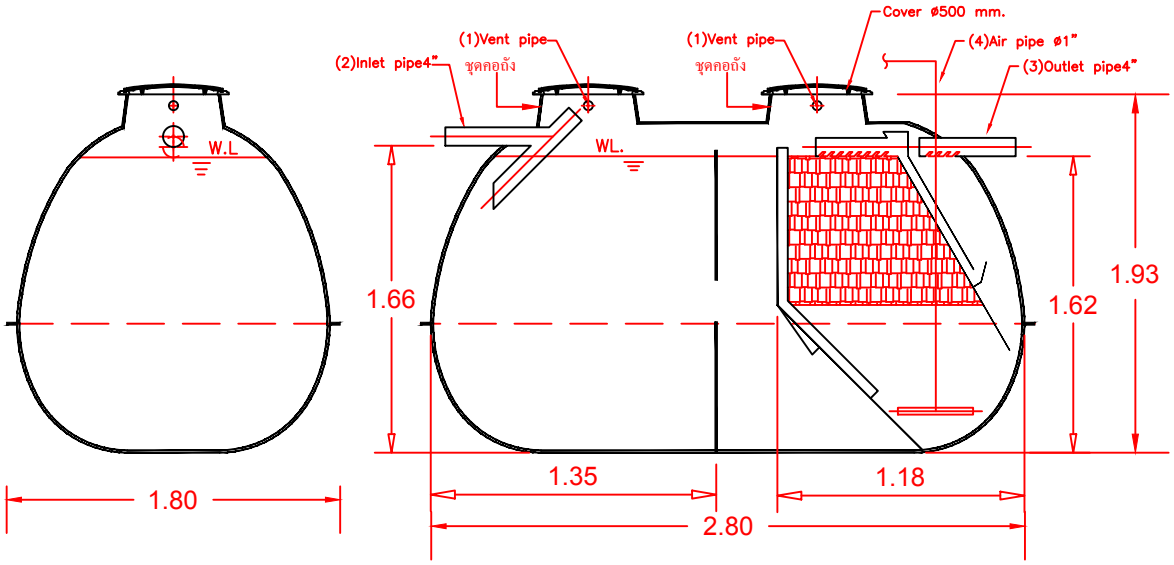

SECTION A-A

Air Blower : "MEDO" Model LAM-200 X 1 Set

Client					
โครงการ HomePro พระราม9					
Title: STAR TANK MODEL SS-763AZ					Scale: NTS.
Drawn: CHOLTICHA	Date: 18-8-59	Approved: Ubonne.	Date: 18-8-59	Drawing No.: Fac_200-3/59	Rev.: Rev.0

PROUD ASIA

FM-DD-04