Tolerance	
<3.00	±0.01
>3.00	±0.02

UNIT = METER

FM-DD-04

STAR TANK MODEL PSS-749

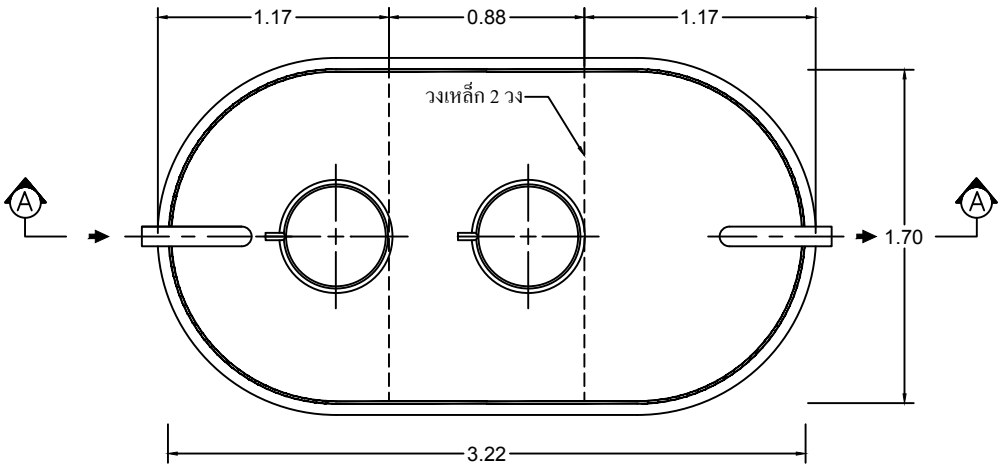

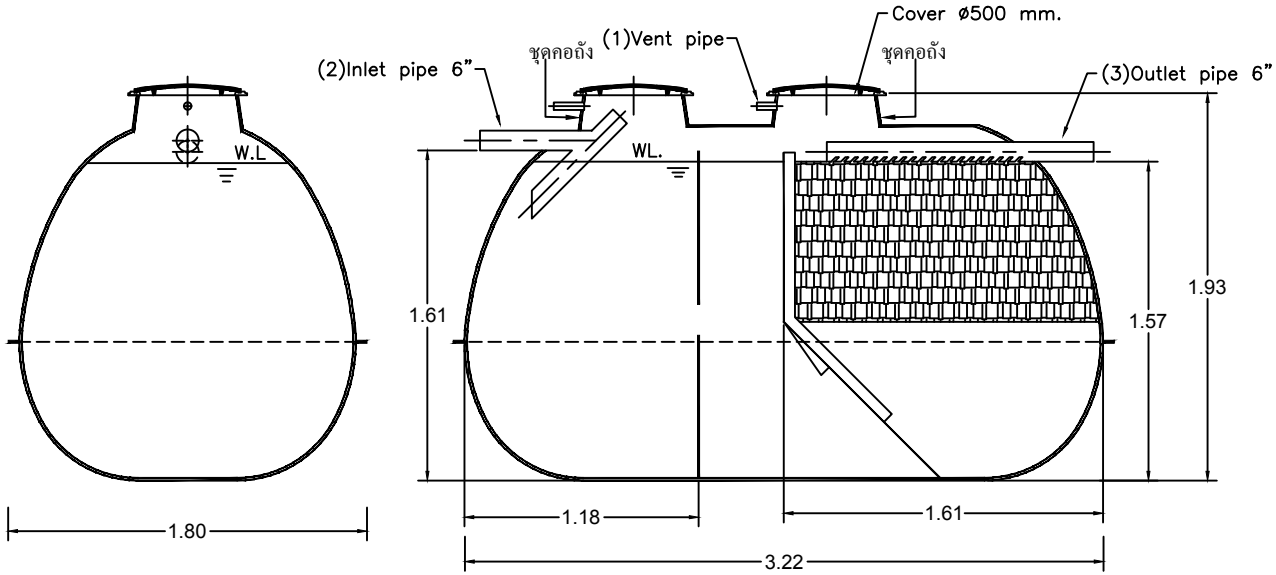

SECTION A-A

UNCONTROLLED DOCUMENT

Client					
โครงการ สภ. บำเหน็จณรงค์ จ.ชัยภูมิ					
Title: STAR PSS-749 For Factory				Scale: NTS.	
Drawn: Chonticha	Date: 17-8-60	Approved: Ubonne	Date: 17-8-60	Drawing No.: Fac_185-1/60	Rev.: Rev.0

PROUD ASIA