Tolerance	
<3.00	±0.01
>3.00	±0.02

UNIT = METER

FM-DD-04

STAR GREASE TRAP

MODEL SGT-S30

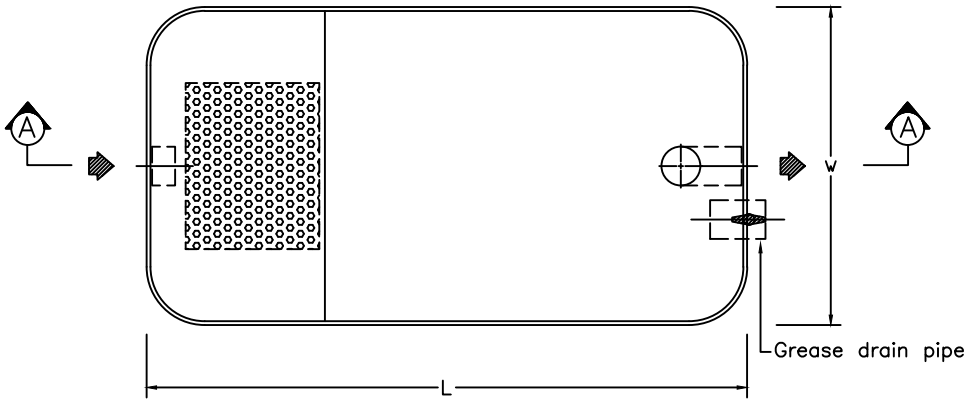

TOP VIEW

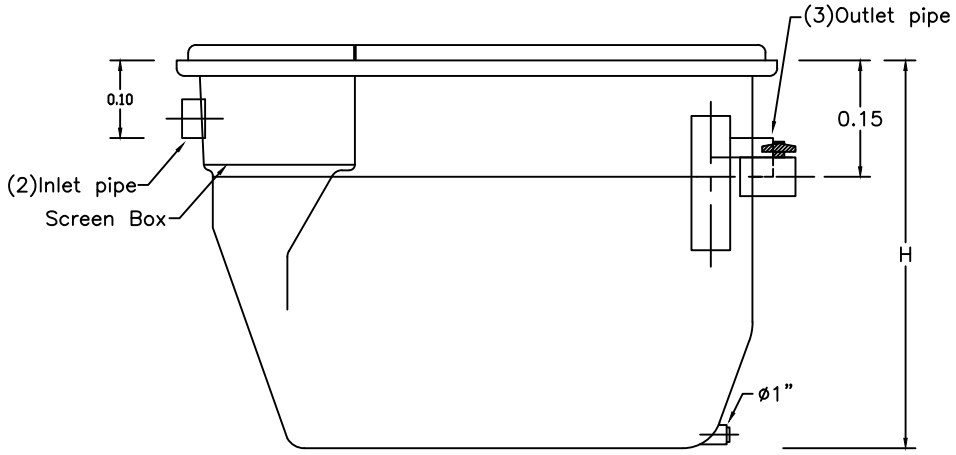

SIDE VIEW

SPECIFICATION

MODEL STAR–SGT–S	W (m.)	L (m.)	H (m.)	VOLUME (litres)	INLET (in.)	OUTLET (in.)	GP* (in.)
SGT–S30	0.30	0.40	0.50	30.0	ø2"	ø2"	ø2"

GP* = Grease drain pipe

UNCONTROLLED DOCUMENT

Client: โครงการ กำจัดขยะมูลฝอย เทศบาลเมืองร้อยเอ็ด					
Title: GREASE TRAP TANK MODEL SGT-S30 for Factory					Scale: NTS.
Drawn: CHOLTICHA	Date: 8–3–61	Approved: Ubonna	Date: 8–3–61	Drawing No.: Fac_059–2/61	Rev.: Rev.0

PROUD ASIA