| Tolerance | |
|---|---|
| <3.00 | ±0.01 |
| >3.00 | ±0.02 |

UNIT = METER

FM-DD-04

# STAR TANK MODEL PSS-797

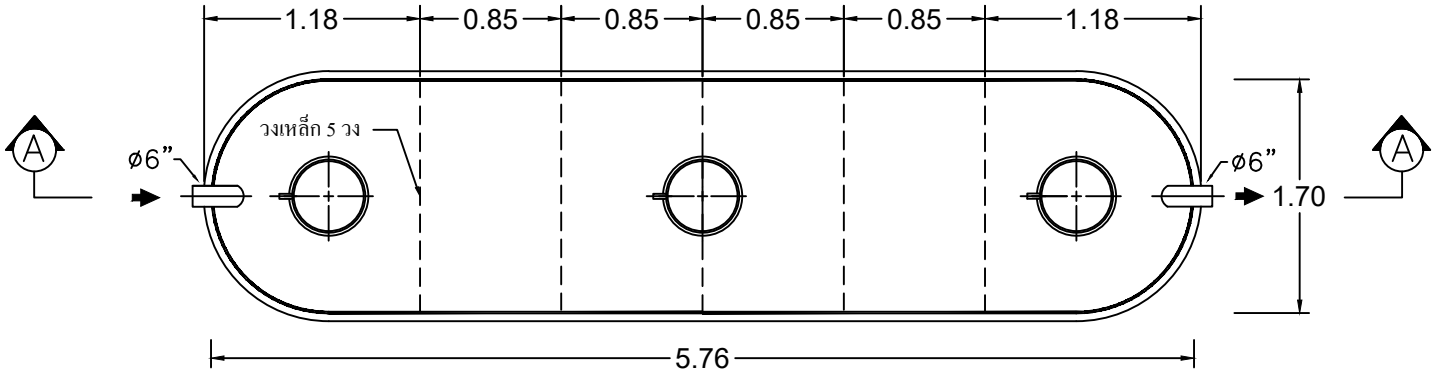


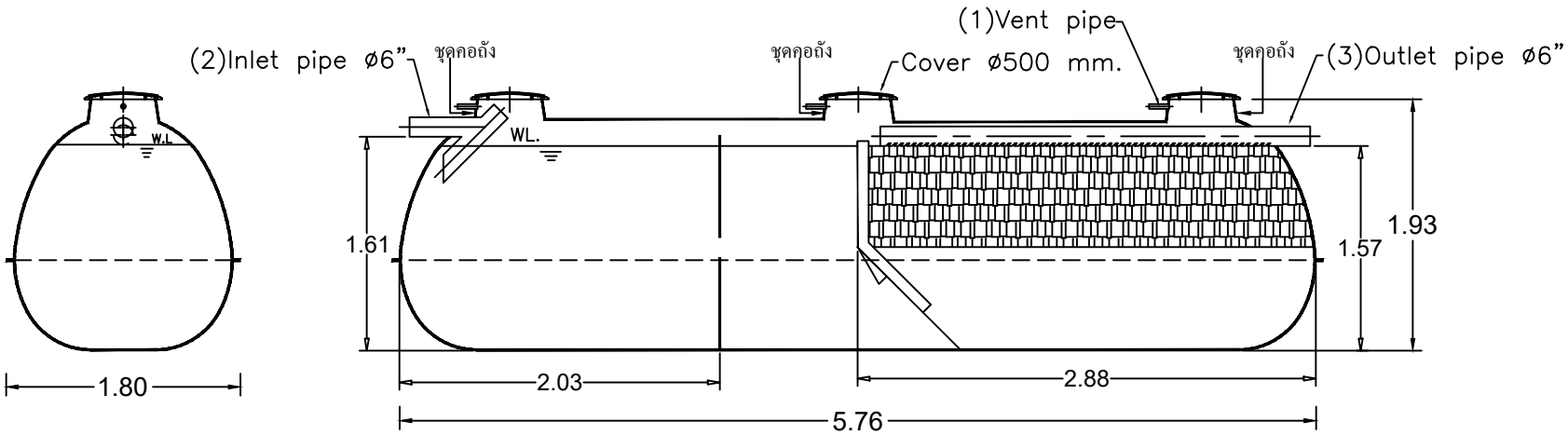


SECTION A-A

UNCONTROLLED DOCUMENT

| Client | | | | | |
|---|---|---|---|---|---|
| โครงการ อ.ทีทำการ สภ.จอมบึง จ.ราชบุรี | | | | | |
| Title: STAR PSS-797 For Factory | | | | | Scale: NTS. |
| Drawn: Chonticha | Date: 13-2-62 | Approved: Ubaune. | Date: 13-2-62 | Drawing No.: Fac_033-2/62 | Rev.: Rev.0 |

PROUD ASIA