FM-DD-04

| Tolerance | |
|---|---|
| <3.00 | ±0.01 |
| >3.00 | ±0.02 |

UNIT = METER

# STAR TANK MODEL PSS-333

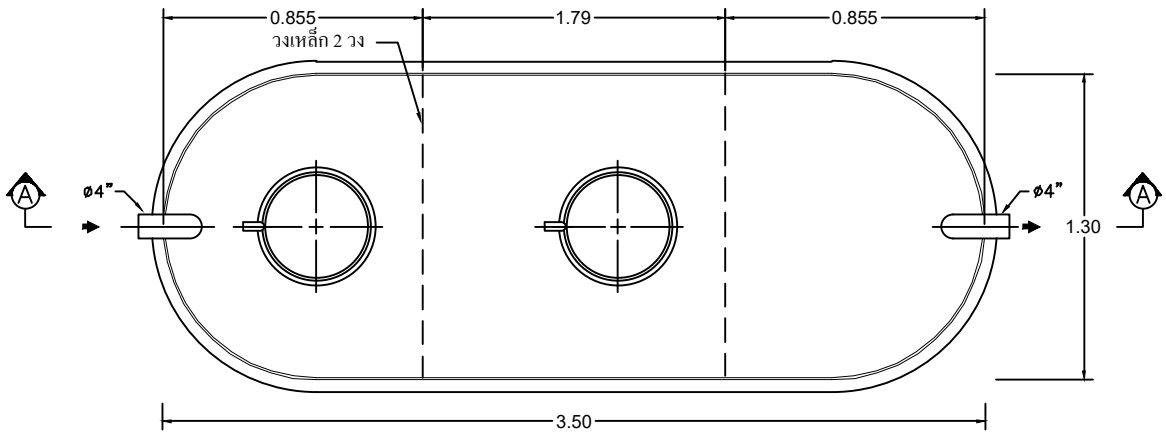


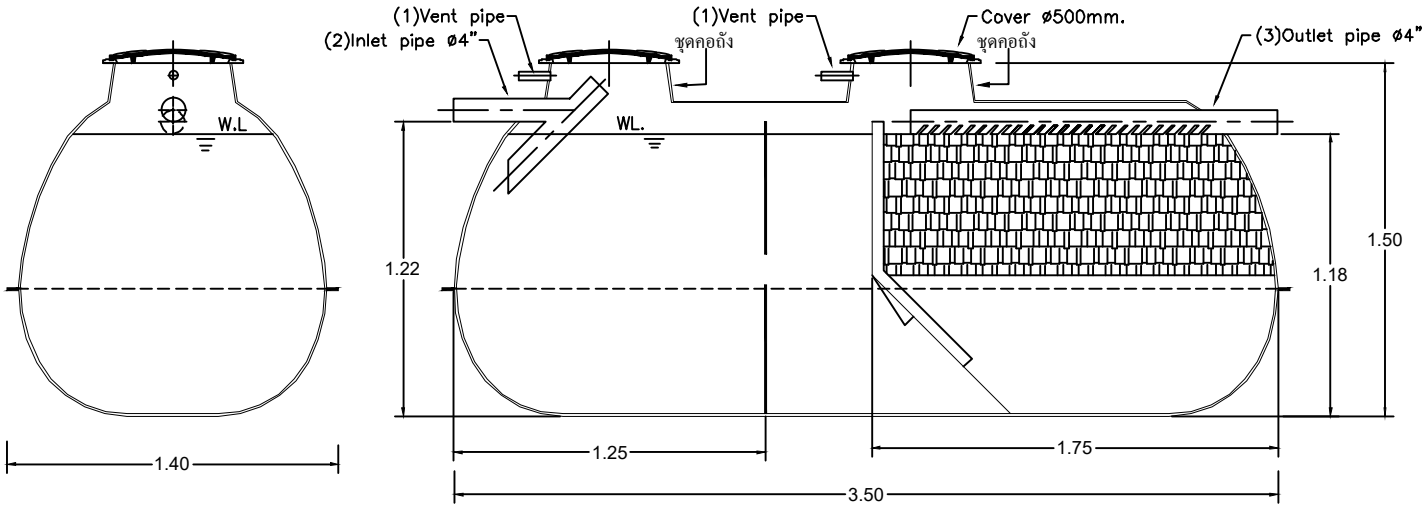


SECTION A-A

UNCONTROLLED DOCUMENT

| Client | | | | | |
|---|---|---|---|---|---|
| โครงการ แฟลตเขาหินซ้อน จ.ฉะเชิงเทรา | | | | | |
| Title: STAR PSS-333 For Factory | | | | | Scale: NTS. |
| Drawn: Chonticha | Date: 10-7-62 | Approved: | Date: 10-7-62 | Drawing No.: Fac_139/62 | Rev.: Rev.0 |

PROUD ASIA