Tolerance	
<3.00	±0.01
>3.00	±0.02

UNIT = METER

FM-DD-04

STAR TANK MODEL PS-11500A

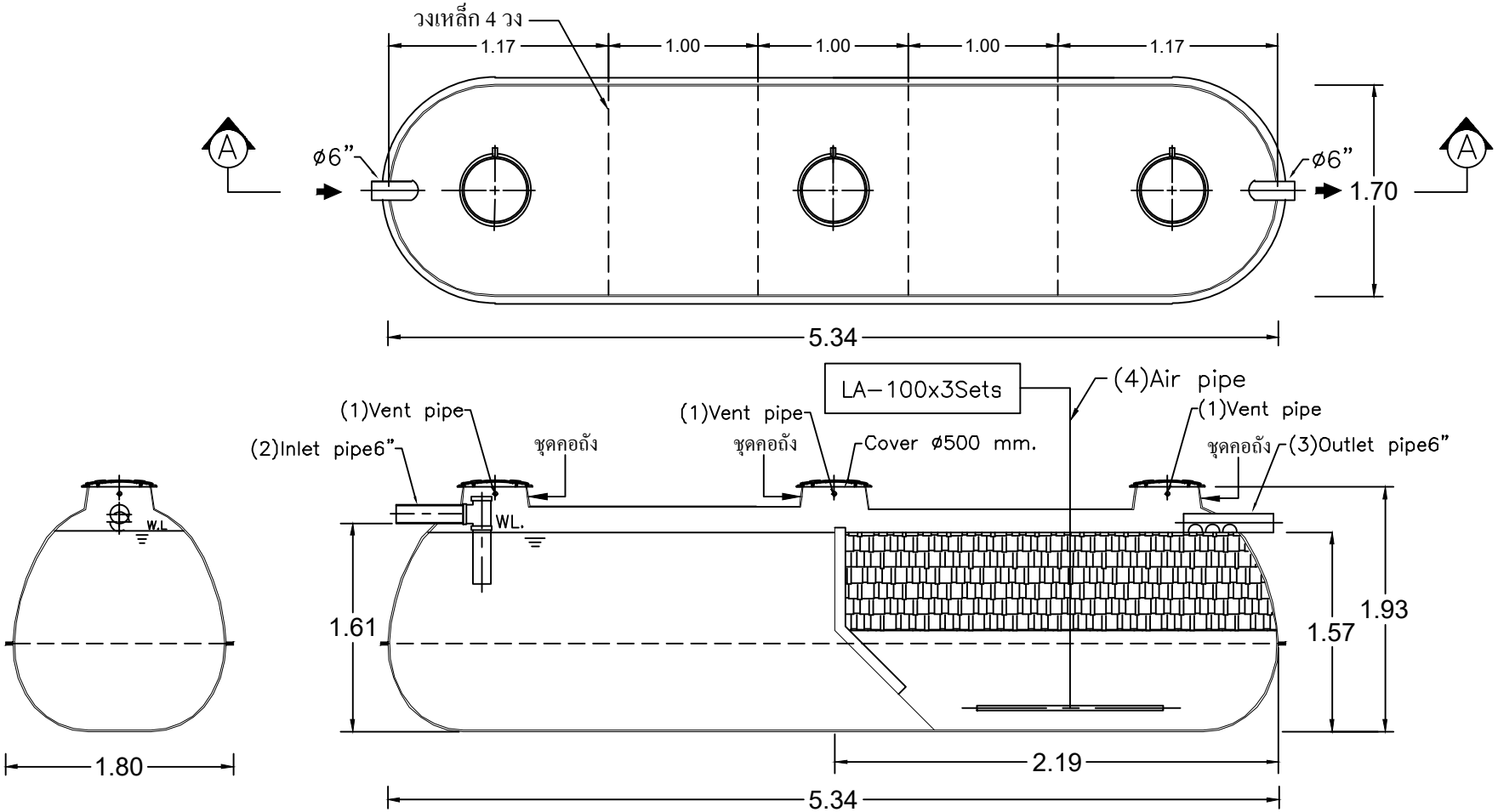

SECTION A-A

UNCONTROLLED DOCUMENT

Client					
โครงการ ถังบำบัดน้ำเสีย					
Title: STAR TANK MODEL PS-11500A For Factory					Scale: NTS.
Drawn: Chonticha	Date: 5–2–63	Approved: Ubonme	Date: 5–2–63	Drawing No.: Fac_016/63	Rev.: Rev.0

PROUD ASIA